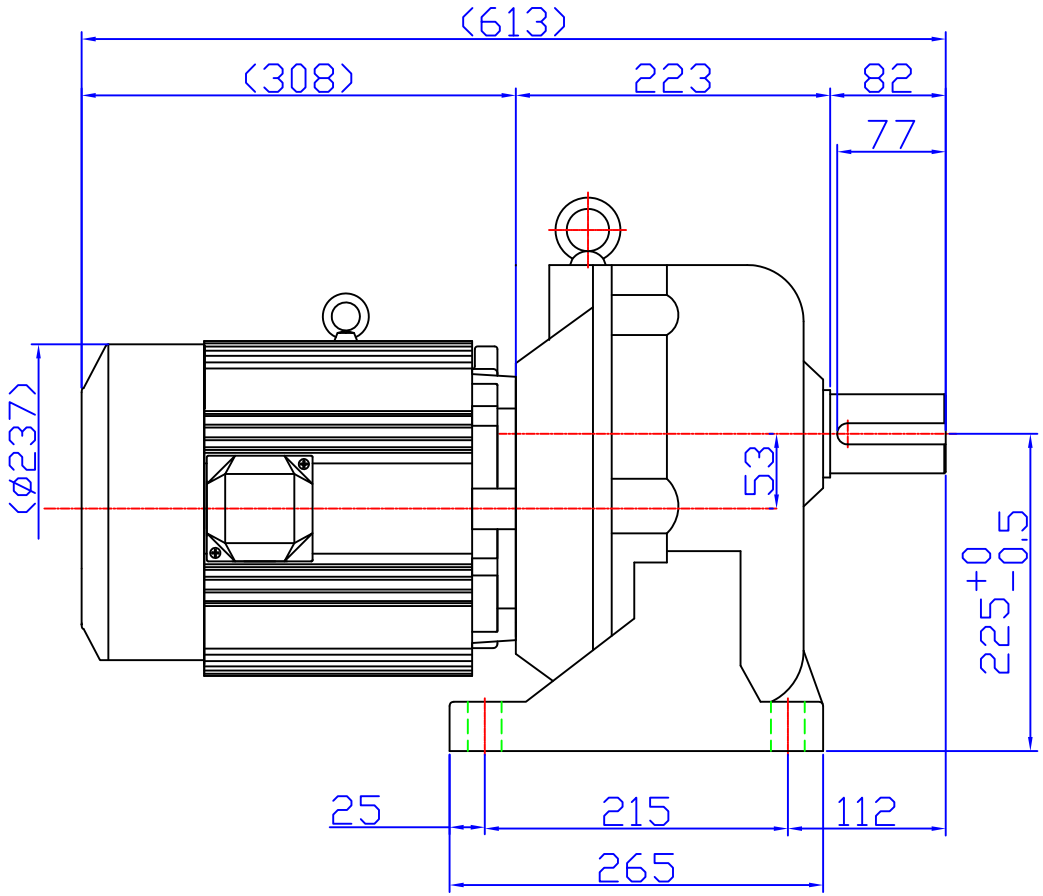

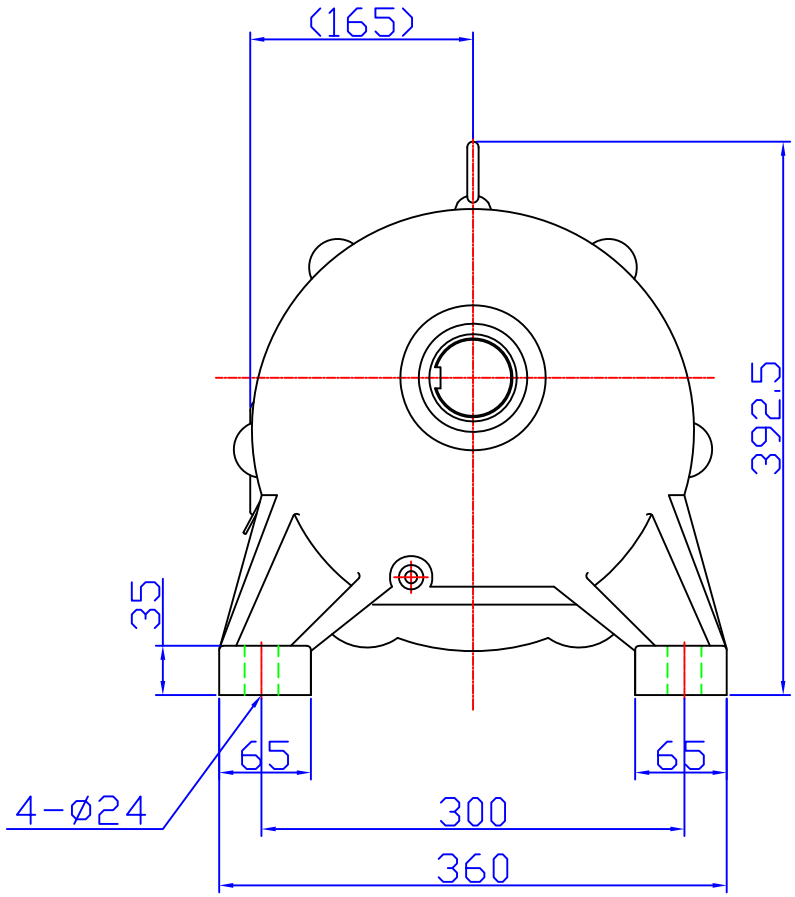

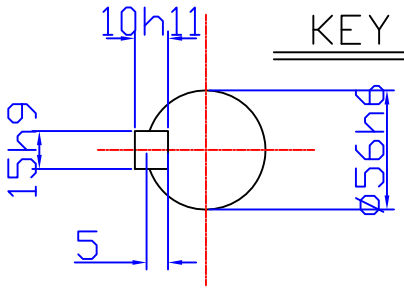

KEY 15X10X69

OUTPUT SHAFT

*( )안 치수는 변경될 수 있음.

NO.	DESCRIPTION			MATERIAL	SIZE OR SPEC.			
DROWN	DESIGNED	CHECKED	APPROVED	SCALE	DIMENSION	Q'ty	DROWN NO.	REMARKS
				1/1	:M/M		NAME MFG56T-75,100RS3.7-4 OUTLINE DIM'S	
DATE 2006-04-01	DAESUNG IND CO., LTD. MECHINERY DIV.						DROW NO. DS5004-H	